Published: 11-May-2011

Automatic Transmission / Transaxle - TDV6 2.7L Diesel -

Item	Specification
* Recommended lubricant	Shell M13754
+ Torque converter nose	Molybdenum disulphide grease to specification FB180

• CAUTIONS:

* Do not use any lubricant other than that specified.

+ Do not over lubricate.

Capacity

Item	Capacity
+ Initial dry fill	9.5 litres (16.7 pints) (10.0 US qts)

CAUTION: + A final oil level check/drain down/top-up must be carried out when the unit has been installed.

General Specification

Item	Specification
Automatic transmission	ZF 6HP26
Speeds	6 Forward, 1 Reverse
Gear ratios:	
First	4.17:1
Second	2.340:1
Third	1.521:1
Fourth	1.143:1
Fifth	0.867:1
Sixth	0.691:1
Reverse	3.403:1
Torque converter	Sachs W255 2GWK with turbine torsional damper and slip controlled, dual friction faced lock-up clutch
Transmission control module:	
Location	Located in gearbox casing
Type	1904

Torque Specifications

Description	Nm	lb-ft
Main control valve body Torx screws	8	6
Transmission heat shield bolts	10	7
Transmission heat shield bracket bolts	10	7
Selector cable bracket nut	12	9
Selector cable bracket bolts	10	7
Wiring harness bracket Torx bolt	10	7
Fluid pan Torx screws	8	6
Engine RH support nut	90	66
Transmission support insulator bolts	60	44
Selector shaft nut	12	9
Selector cable bracket bolts	10	7
Flexplate to torque converter bolts	45	33
Transmission bolts	45	33
Transmission breather pipe clip bolt	25	18
Transmission fluid lines clip bolt	10	7
Radiator access panel bolts	10	7
Exhaust cross-over pipe center support bracket bolts	25	18
Exhaust cross-over pipe LH/RH support bracket bolts	25	18
Turbocharger support bracket nut and bolts	22	16
Transmission fluid drain plug	9	6.5
Transmission fluid filler/level plug	35	26
transmission heat shield bolts	10	7
Transmission under shield bolts	10	7
Transfer case retaining bolts	45	33
* Exhaust crossover pipe retaining nuts	22	16
Exhaust manifold heat shield retaining bolts	10	7

*** New nuts must be installed**

transmissionmanuals.com

Published: 11-May-2011

Automatic Transmission / Transaxle - TDV6 2.7L Diesel - Automatic Transmission

Description and Operation

For additional information, refer to: Automatic Transmission (307-01B Automatic Transmission/Transaxle - V6 4.0L Petrol, Description and Operation).

transmissionmanuals.com

Published: 11-May-2011

Automatic Transmission / Transaxle - TDV6 2.7L Diesel - Automatic Transmission

Diagnosis and Testing

Principle of Operation

For detailed description of the automatic transmission system and operation, refer to the relevant Description and Operation sectin of the workshop manual.
REFER to: Automatic Transmission (307-01A Automatic Transmission/Transaxle - TDV6 2.7L Diesel, Description and Operation).

Inspection and Verification

This section is intended to provide a means for the technician to diagnose transmission component faults, rather than replacing the entire unit.

However, there are a number of situations where the replacement of the unit is the only practical solution, and this section will cover the diagnosis necessary to gather the information required for transmission replacement to be authorized by the warranty prior approval program (WPAP) where it applies, as well as covering the diagnostic trouble codes (DTCs) stored by the control module.

The basic checks of the transmission (fluid condition and level, etc) should be carried out first, and this will mean using the approved diagnostic system or other equipment with data logging facility to monitor temperatures, etc.

For information on the operation of the transmission, refer to the relevant workshop manual section.

1. **1.** Verify the customer concern.
2. **2.** Visually inspect for obvious signs of mechanical or electrical damage.

Visual Inspection

Mechanical	Electrical
• Fluid condition • Fluid level • Fluid leaks • Fluid cooler • External linkages • Gear selector lever	• Fuses • Wiring harnesses • Electrical connector(s) • Transmission control module (TCM) • Engine control module (ECM)

3. **3.** If an obvious cause for an observed or reported concern is found, correct the cause (if possible) before proceeding to the next step.
4. **4.** Use the approved diagnostic system or a scan tool to retrieve any DTCs before moving onto the DTC index.
    - Because the DTCs are stored in more than one module, a complete vehicle read is recommended
    - Make sure that all DTCs are cleared following rectification.

Preliminary Inspection

1. **1.** As much information as possible should be obtained from the owner/driver about the fault in order to assist with the diagnosis. Time spent on this will reduce the necessity for extensive road testing and possible missed diagnosis.
    - The information required for WPAP is still useful as an aid to diagnosis, even where the system is not in operation

    Required information for WPAP (where applicable)

- The nature of the fault (loss of drive, slip, judder, gear shift quality, noise, etc)
- The frequency with which the fault occurs
- The conditions under which the fault occurs, including temperature (coolant and ambient), selected gear, road speed, engine speed, and any specific conditions
- Check and rectify non-transmission related DTCs before continuing with transmission diagnosis

2. **2.** Record the vehicle details, including:

- Service history
- The transmission serial number
- The transmission software level

3. **3.** Visually inspect the transmission for fluid leaks, damage, etc.
4. **4.** Check the transmission fluid condition.

• NOTE: Fluid condition is a good indicator of the transmission internal condition. If the fluid is burnt and/or contaminated, this would usually mean the internal damage to the transmission is at such a level that unit replacement is the best option. Compare the fluid drained from the transmission with fresh fluid for color and odor.

5. **5.** Check the transmission fluid level. Refer to the relevant workshop manual section.

• NOTE: This is crucial to the operation of the transmission, and the procedure must be closely followed to avoid inaccurate diagnosis, with the resultant possible rejection of a warranty claim.

transmissionmanuals.com

6. **6.** Check the engine idle speed and throttle sensor using the approved diagnostic system or a scan tool.
7. **7.** Check the transmission selector cable adjustment. Refer to the relevant workshop manual section.
8. **8.** Check the transmission range sensor adjustment.
    - A comprehensive procedure for transmission range sensor setting is accessible through the approved diagnostic system.

If any faults are found and rectified in the above sequence, clear any DTCs and test the vehicle for normal operation.

If a failure condition is found indicating the need to renew the transmission assembly, the request must go through the warranty prior approval program (where applicable) before work is begun.

DTC Index

For a list of Diagnostic Trouble Codes (DTCs) that could be logged on this vehicle, please refer to Section 100-00.
REFER to: Diagnostic Trouble Code (DTC) Index - DTC: Transmission Control Module (TCM) - Bosch (100-00 General Information, Description and Operation).

transmissionmanuals.com

Published: 11-May-2011

Automatic Transmission / Transaxle - TDV6 2.7L Diesel - Transmission Fluid Drain and Refill

General Procedures

- WARNINGS:

Observe due care when draining transmission fluid as the fluid can be very hot.

Observe due care when working near a hot exhaust system.

All vehicles

1. WARNING: Do not work on or under a vehicle supported only by a jack. Always support the vehicle on safety stands.

Raise and support the vehicle.

2. Remove the transmission undershield.

- Remove the 6 bolts.

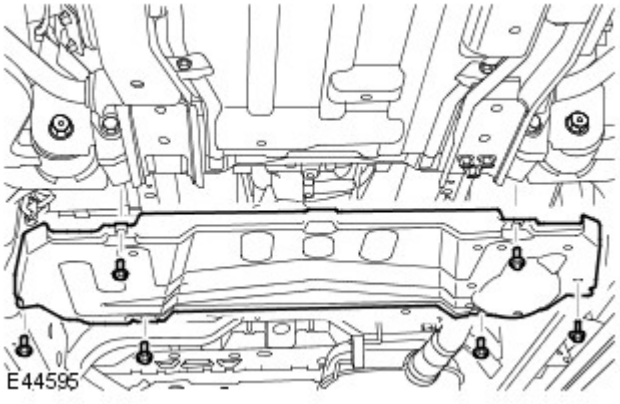

3. If installed, remove the transmission heat shield.

- Remove the 4 bolts.

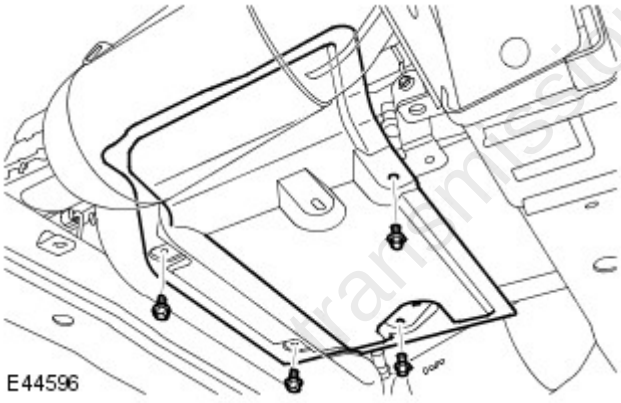

Vehicles with 4.0L engine

4. Remove the transmission support insulator through-bolt.

- Raise the transmission to gain access to the fluid drain plug.

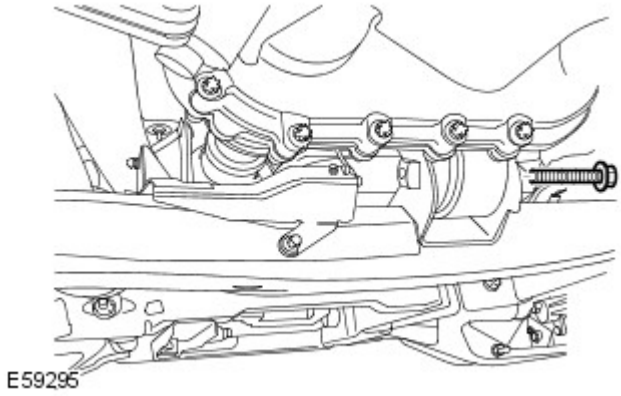

transmissionmanuals.com

All vehicles

5. Clean the area around the transmission fluid drain and filler plugs.
6. Place a container under the transmission.



7. WARNINGS:

Observe due care when draining transmission fluid as the fluid can be very hot.

Observe due care when working near a hot exhaust system.

Remove the transmission fluid filler/level plug.

- Remove and discard the sealing washer.



8. Remove the transmission fluid drain plug.
   - Remove and discard the sealing washer.
   - Allow the fluid to drain.

9. Install the transmission fluid drain plug and tighten to 9 Nm (7 lb.ft).
   - Install a new sealing washer.

Vehicles with 4.0L engine

10. Install the transmission support insulator through-bolt and tighten to 175 Nm (129 lb.ft).
    - Lower the transmission.

All vehicles

11. Add 3.5 to 4 litres of the correct transmission fluid, or until a small thread of fluid runs from the filler/level hole.
12. Check and top-up the transmission fluid level.
    For additional information, refer to: Transmission Fluid Level Check (307-01A Automatic Transmission/Transaxle - TDV6 2.7L Diesel, General Procedures).

transmissionmanuals.com

Published: 11-May-2011

Automatic Transmission / Transaxle - TDV6 2.7L Diesel - Transmission Fluid Level Check

General Procedures

- WARNINGS:

Observe due care when draining transmission fluid as the fluid can be very hot.

Observe due care when working near a hot exhaust system.

CAUTION: The gearbox fluid level must only be checked when the temperature of the fluid is between 30 degrees and 50 degrees. The fluid level obtained will be incorrect if the reading is outside this temperature range.

1. The following steps must be observed before starting the transmission fluid level check and top-up.

- The vehicle must be on a horizontal ramp.
- The parking brake must be applied.
- The wheels must be chocked.

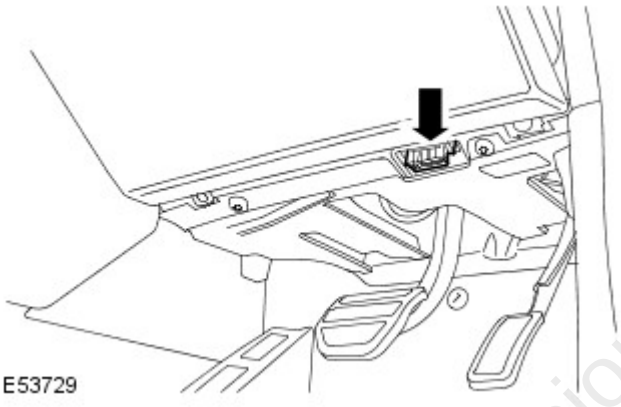

2. CAUTION: Make sure the transmission fluid temperature is below 30 degrees before starting the fluid level check.

Using the approved Land Rover diagnostic equipment, monitor the transmission fluid temperature.

3. Start the engine. Move the selector lever from 'P' through all gear positions, pausing in each gear position for 2-3 seconds and return to the 'P' position.

4. WARNING: Do not work on or under a vehicle supported only by a jack. Always support the vehicle on safety stands.

Raise and support the vehicle.

5. Remove the transmission undershield.

- Remove the 6 bolts.

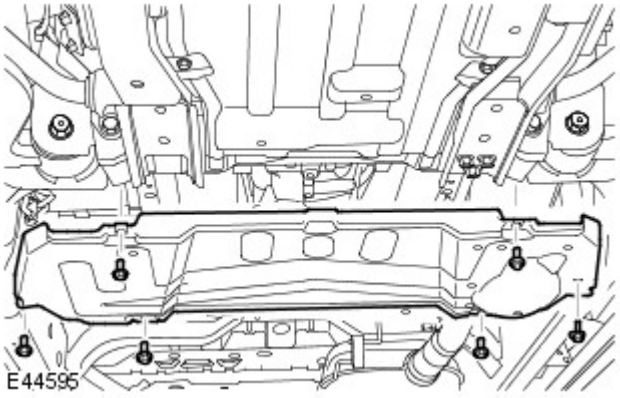

transmissionmanuals.com

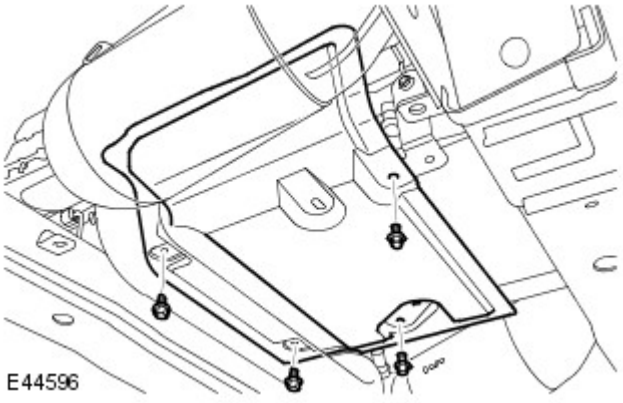

6. If installed, remove the transmission heat shield.

- Remove the 4 bolts.

7. Place a container under the transmission.



8. WARNINGS:

Observe due care when draining transmission fluid as the fluid can be very hot.

Observe due care when working near a hot exhaust system.

CAUTION: The gearbox fluid level must only be checked when the temperature of the fluid is between 30 degrees and 50 degrees. The fluid level obtained will be incorrect if the reading is outside this temperature range.

Remove the transmission fluid filler/level plug.

- Clean the area around the filler/level plug.
- Remove and discard the sealing washer.

9. If no fluid loss is apparent when the filler/level plug is removed, with the engine at idle, continue to fill the transmission until a small thread of oil runs from oil filler/level hole.

10. Install the transmission fluid filler/level plug and tighten to 35 Nm (26 lb.ft).

- Install a new sealing washer.
- Remove the container.

11. If installed, install the transmission heat shield.

- Tighten the bolts to 10 Nm (7 lb.ft).

12. Install the transmission undershield.

- Tighten the bolts to 10 Nm (7 lb.ft).

13. Disconnect the approved Land Rover diagnostic equipment from the vehicle.

transmissionmanuals.com

Published: 11-May-2011

Automatic Transmission / Transaxle - TDV6 2.7L Diesel - Selector Shaft Seal

In-vehicle Repair

Special Tool(s)	
307-509-1  E50766	ZF Automatic transmission selector shaft seal remover 307-509-1 (LRT-44-033/1)
307-509-2  E50767	ZF Automatic transmission selector shaft seal remover 307-509-2 (LRT-44-033/2)
307-509-3  E50768	ZF Automatic transmission selector shaft seal installer 307-509-3 (LRT-44-033/3)

Removal

1. WARNING: Do not work on or under a vehicle supported only by a jack. Always support the vehicle on safety stands.

Raise and support the vehicle.

2. LH selector shaft seal only: Remove the exhaust system. For additional information, refer to: Exhaust System - Vehicles Without: Diesel Particulate Filter (DPF) (309-00A Exhaust System - TDV6 2.7L Diesel, Removal and Installation) / Exhaust System - Vehicles With: Diesel Particulate Filter (DPF) (309-00A Exhaust System - TDV6 2.7L Diesel, Removal and Installation).

3. Remove the transmission heat shield.

- Remove the 4 bolts.

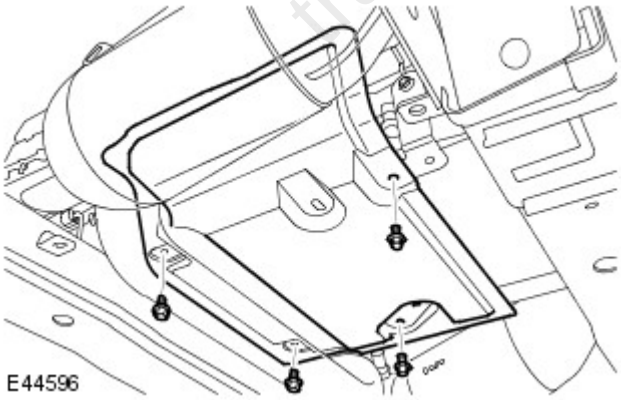

transmissionmanuals.com

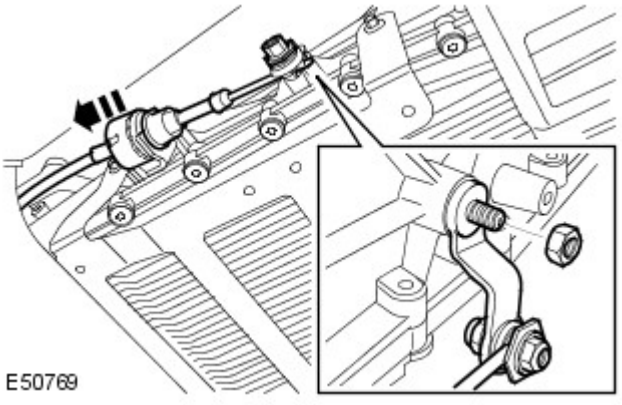

4. Release the selector cable and lever.

- Remove the nut.
- Compress the latch and release the cable.

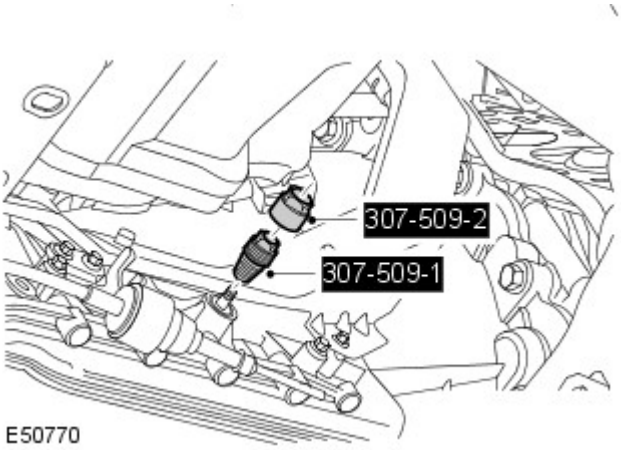

5. CAUTION: Before the disconnection or removal of any components, make sure the area around joint faces and connections are clean. Plug any open connections to prevent contamination.

Remove the selector shaft seal.

- Install 307-509-1 to the seal.
- Install 307-509-2 to 307-509-1 and extract the seal.

Installation

1. NOTE: Clean the components.

Using 307-509-3, install the selector shaft seal.

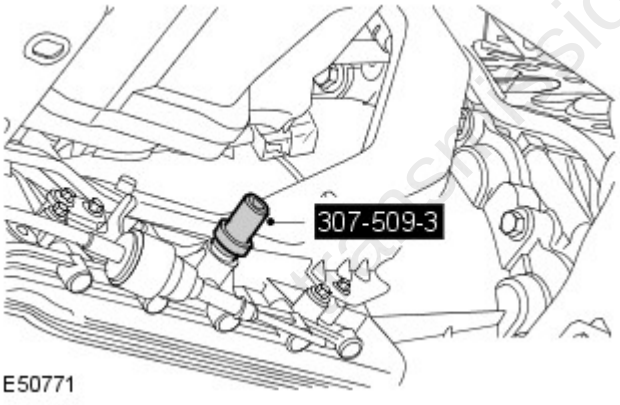

2. Install the selector cable and bracket.

- Secure with the clip.
- Tighten the nut to 12 Nm (9 lb.ft).

3. Install the transmission heat shield.

- Install the bolts.

4. LH selector shaft seal only: Install the exhaust system. For additional information, refer to: Exhaust System - Vehicles Without: Diesel Particulate Filter (DPF) (309-00A Exhaust System - TDV6 2.7L Diesel, Removal and Installation) / Exhaust System - Vehicles With: Diesel Particulate Filter (DPF) (309-00A Exhaust System - TDV6 2.7L Diesel, Removal and Installation).

www.transmissionmanuals.com

Published: 11-May-2011

Automatic Transmission / Transaxle - TDV6 2.7L Diesel - Transmission Control Module (TCM)

In-vehicle Repair

Special Tool(s)	
	Seal extractor 307-492 (LRT-44-005)

Removal

- NOTE: The transmission control module (TCM) is part of the main control valve body and cannot be serviced separately.

1. WARNING: Do not work on or under a vehicle supported only by a jack. Always support the vehicle on safety stands.

Raise and support the vehicle.

2. Remove the fluid pan.
For additional information, refer to: Fluid Pan, Gasket and Filter (307-01A Automatic Transmission/Transaxle - TDV6 2.7L Diesel, In-vehicle Repair).

3. Disconnect the electrical connector.

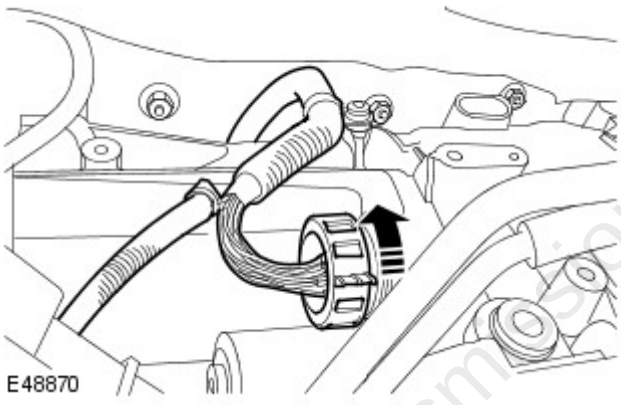

4. Remove and discard the electrical connector sleeve.

- Release the retainer.

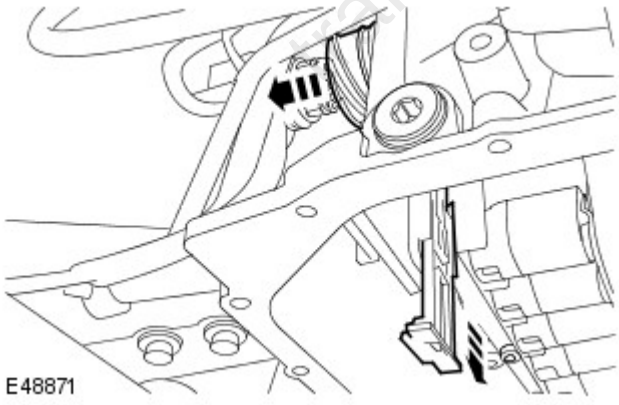

transmissionmanuals.com

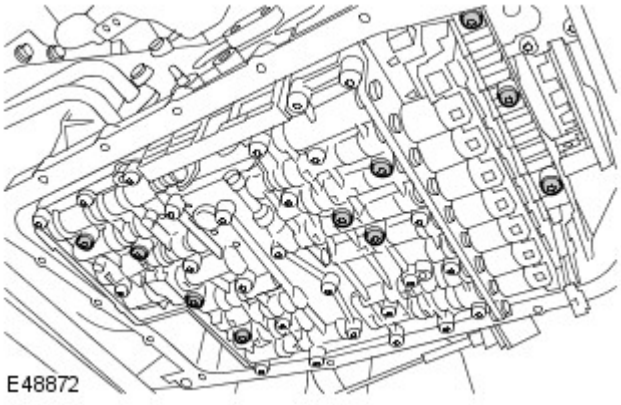

5. Remove the valve body.

- Position a container to collect spillage.
- Remove the 10 Torx screws.

6. Using the special tool, remove the 4 seals.

7. Remove the seal block.

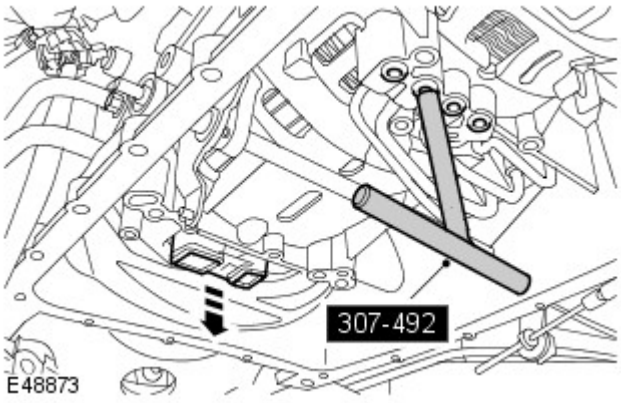

Installation

1. CAUTIONS:

Make sure that when fully fitted, all seals protrude by the same amount.

Engage the selector lever with the groove in the piston rod.

Install the valve body.

- Clean the component mating faces.
- Install new seals.
- Install a new seal block.
- Tighten the Torx screws to 8 Nm (6 lb.ft).

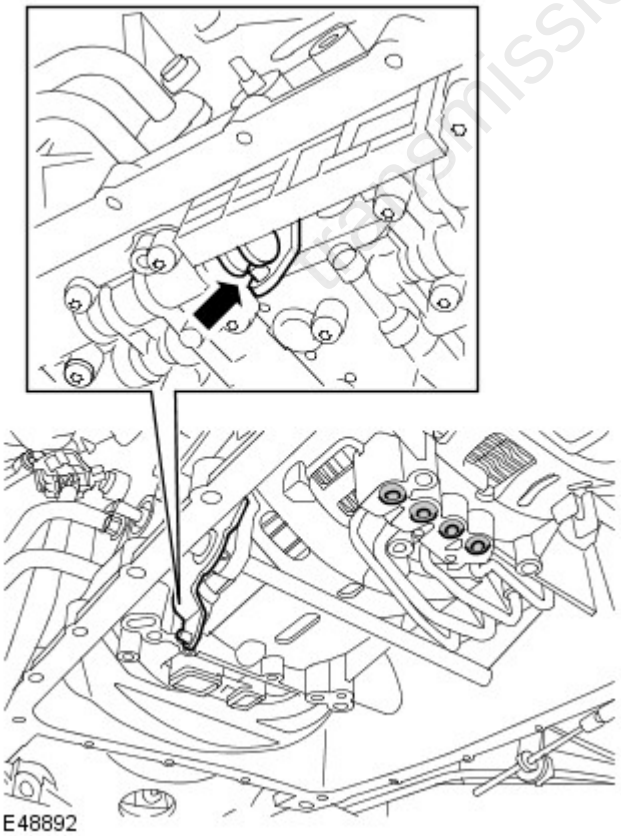

2. Install a new electrical connector sleeve.

transmissionmanuals.com

- Secure with retainer.

3. Connect the electrical connector.
4. Install the fluid pan.
   For additional information, refer to: Fluid Pan, Gasket and Filter (307-01A Automatic Transmission/Transaxle - TDV6 2.7L Diesel, In-vehicle Repair).
5. Using T4, calibrate a new TCM.

transmissionmanuals.com

Published: 11-May-2011

Automatic Transmission / Transaxle - TDV6 2.7L Diesel - Output Shaft Seal

In-vehicle Repair

Special Tool(s)	
 E50940	Oil seal remover 303-903 (LRT-12-092)
 E52536	Oil seal installer 307-520

Removal

1. WARNING: Do not work on or under a vehicle supported only by a jack. Always support the vehicle on safety stands.

   Raise and support the vehicle.

2. Remove the transfer case.
   For additional information, refer to: Transfer Case - TDV6 3.0L Diesel (308-07B Transfer Case, Removal).

3. CAUTION: Care must be taken to avoid damage to the seal register and running surface.

   Remove the transmission output shaft oil seal.

   - Use the special tool.

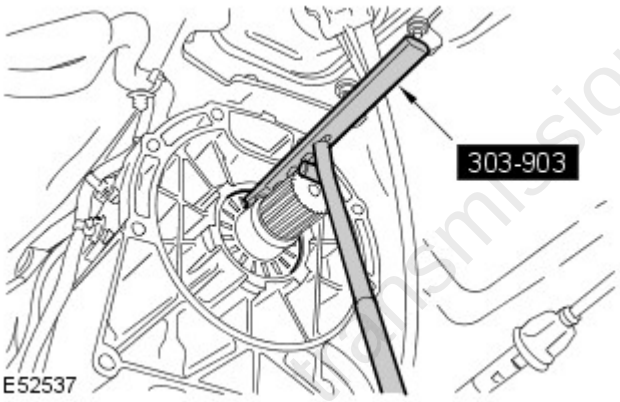

E52537

Installation

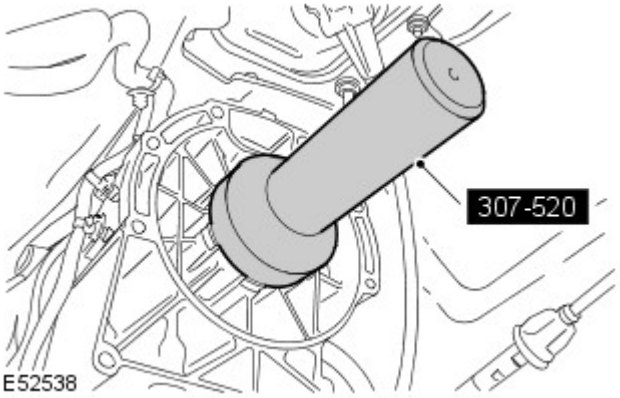

E52538

1. CAUTION: Oil seals must be fitted dry.

   Install a new transmission output shaft oil seal.

   - Clean the seal register.
   - Use the special tool.

2. Install the transfer case.
   For additional information, refer to: Transfer Case - TDV6 3.0L

Diesel (308-07B Transfer Case, Removal).

3. Check and top-up the transmission fluid level.
   For additional information, refer to: Transmission Fluid Level Check (307-01A Automatic Transmission/Transaxle - TDV6 2.7L Diesel, General Procedures).

transmissionmanuals.com

Published: 11-May-2011

Automatic Transmission / Transaxle - TDV6 2.7L Diesel - Fluid Pan, Gasket and Filter

In-vehicle Repair

Removal

1. Disconnect the battery ground cable.
   For additional information, refer to: Specifications (414-00 Battery and Charging System - General Information, Specifications).

2. WARNING: Do not work on or under a vehicle supported only by a jack. Always support the vehicle on safety stands.

   Raise and support the vehicle.

3. Remove the transmission heat shield.
   - Remove the four retaining bolts.

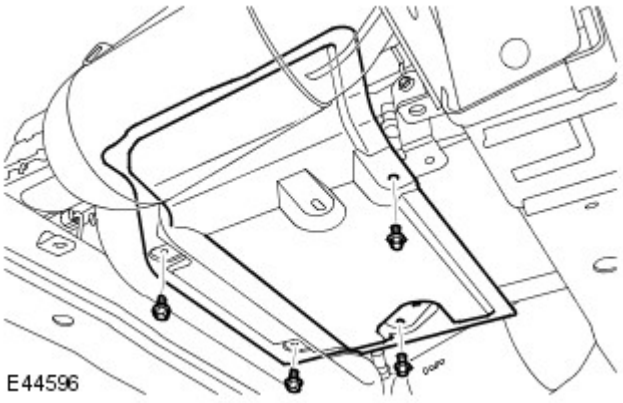

4. Release the selector cable from its abutment bracket.

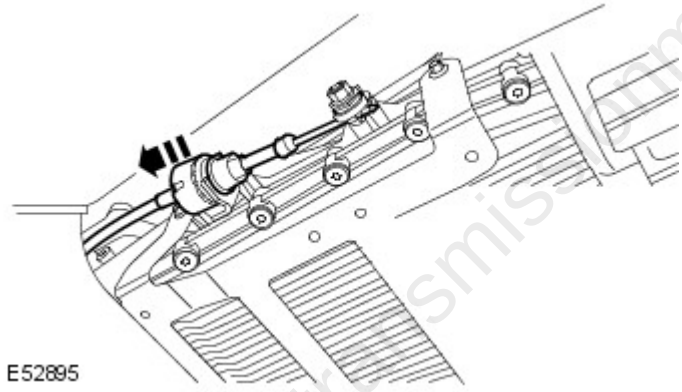

5. Remove the transmission heat shield bracket.
   - Remove the four retaining bolts.

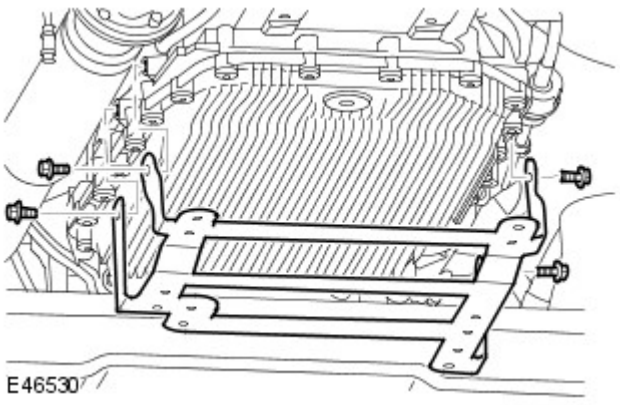

6. Drain the transmission fluid.
   For additional information, refer to: Transmission Fluid Drain and Refill (307-01A Automatic Transmission/Transaxle - TDV6 2.7L Diesel, General Procedures).

transmissionmanuals.com

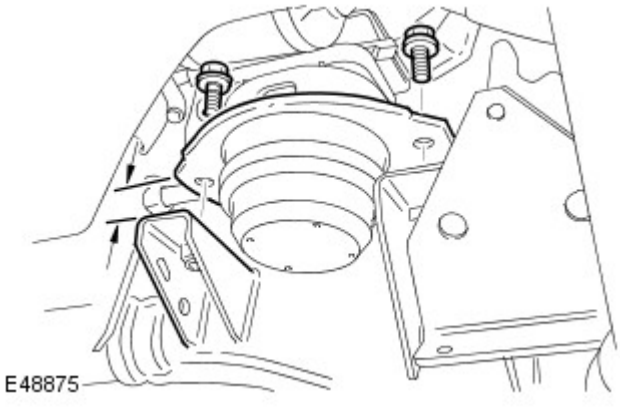

7. CAUTION: Protect the engine during this operation.

Raise the RH side of the engine by approximately 35 mm (1.38 in).

- Use a transmission jack.
- Remove and discard the two retaining bolts.

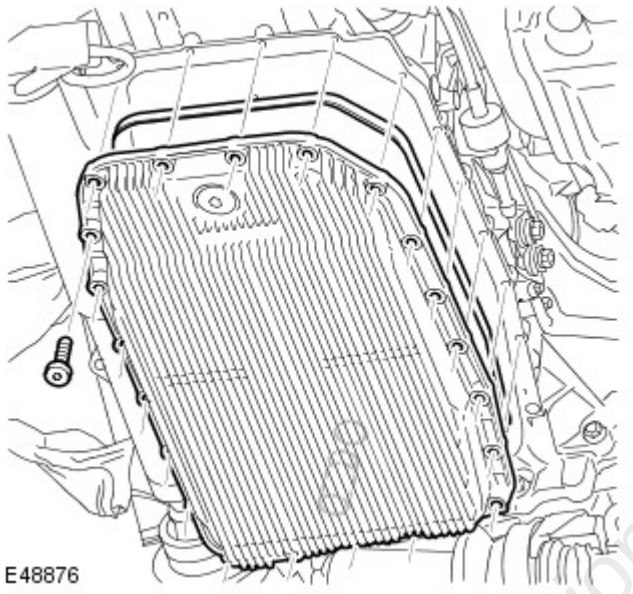

8. Remove the fluid pan, gasket and filter.

- Position a container to collect the fluid spillage.
- Remove the 21 Torx screws.
- Remove and if necessary, discard the seal.
- Discard the O-ring seal.

Installation

1. Install the fluid pan, gasket and filter.

- Clean the components mating faces.
- Install a new O-ring seal.
- Tighten the Torx screws to 8 Nm (6 lb.ft).

2. Lower the RH side of the engine.

- Remove the transmission jack.
- Install new engine mounting retaining bolts and tighten to 45 Nm (33 lb.ft).

3. Install the transmission heat shield bracket.

- Install the four retaining bolts and tighten to 10 Nm (7 lb.ft).

4. Install the selector cable to its abutment bracket.

5. Install the transmission heat shield.

- Install the four retaining bolts and tighten to 10 Nm (7 lb.ft).

6. Connect the battery ground cable.
For additional information, refer to: Specifications (414-00 Battery and Charging System - General Information, Specifications).

7. Refill the transmision with fluid.
For additional information, refer to: Transmission Fluid Drain and Refill (307-01A Automatic Transmission/Transaxle - TDV6

transmissionmanuals.com

2.7L Diesel, General Procedures).

transmissionmanuals.com

Published: 11-May-2011

Automatic Transmission / Transaxle - TDV6 2.7L Diesel - Main Control Valve Body

In-vehicle Repair

Special Tool(s)	
	Seal extractor 307-492(LRT-44-005)

Removal

- NOTE: The transmission control module (TCM) is part of the main control valve body and cannot be serviced separately.

1. Disconnect the battery ground cable.
For additional information, refer to: Specifications (414-00 Battery and Charging System - General Information, Specifications).

2. WARNING: Make sure to support the vehicle with axle stands.

Raise and support the vehicle.

3. Drain the transmission fluid.
For additional information, refer to: Transmission Fluid Drain and Refill (307-01A Automatic Transmission/Transaxle - TDV6 2.7L Diesel, General Procedures).

4. Remove the transmission support crossmember.

- Support the transmission on a jack.
- Remove the transmission mounting securing bolt.
- Remove the 4 bolts.
- Remove the transmission support insulator through-bolt.

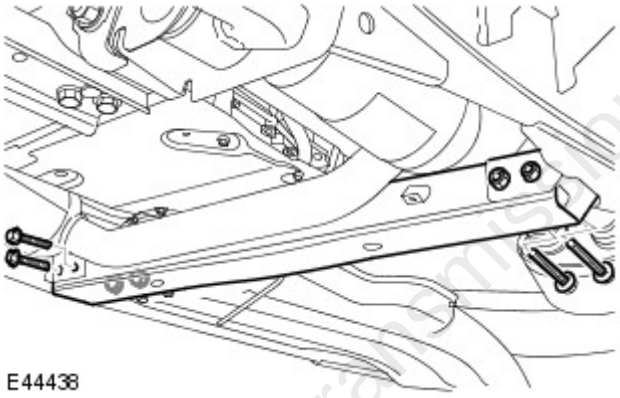

5. Release the fuel filter from its bracket.

- Tie aside.

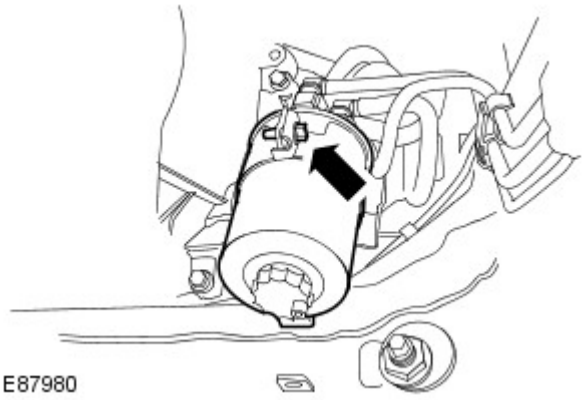

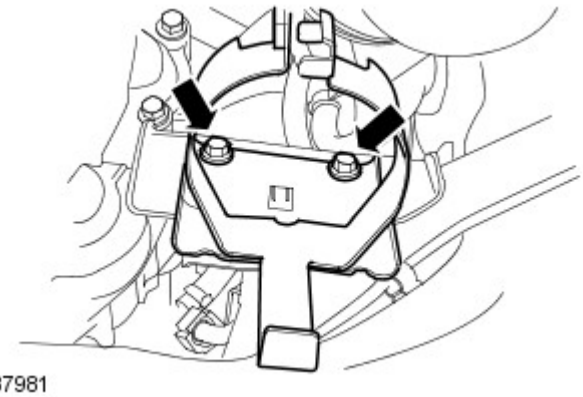
E87981

6. Release the support bracket.

- Remove the bolt closest to the engine.
- Release but do not remove the second bolt.

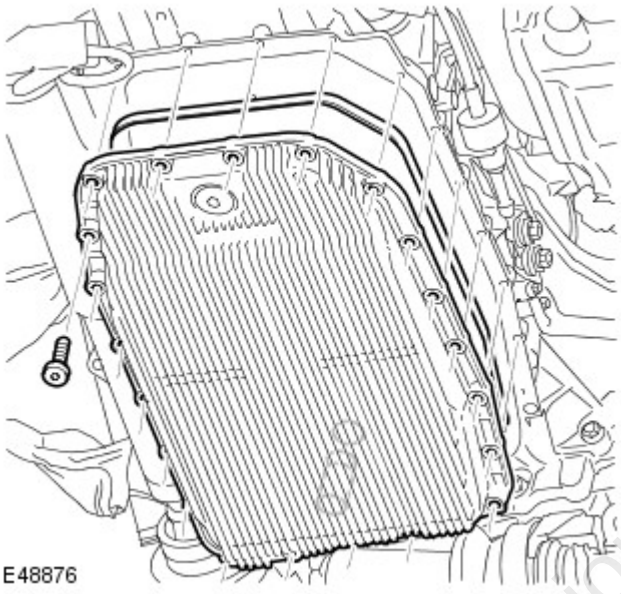
E48876

7. Release the oil pan.

- Position a container to collect the oil spillage.
- Remove the 21 Torx screws.

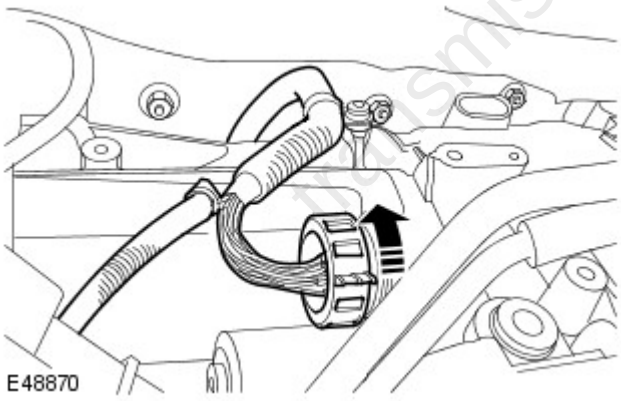
E48870

8. Release and disconnect the electrical connector.

transmissionmanuals.com

9. Remove and discard the electrical connector sleeve.

- Release the retainer.

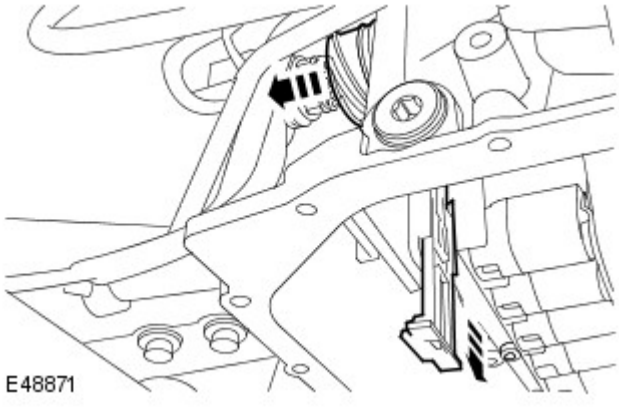

10. Remove the valve block and oil pan.

- Remove the 7 Torx bolts.
- Discard the O-ring seal.

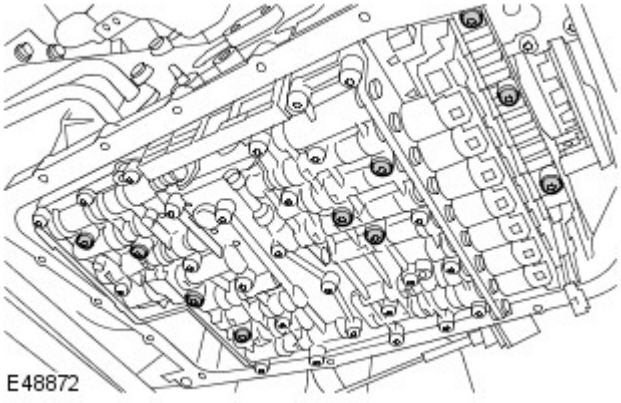

11. Using the special tool, remove the 4 seals.

12. Remove the seal block.

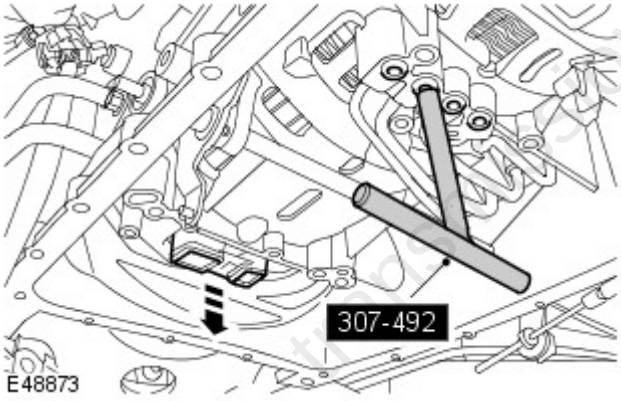

Installation

transmissionmanuals.com

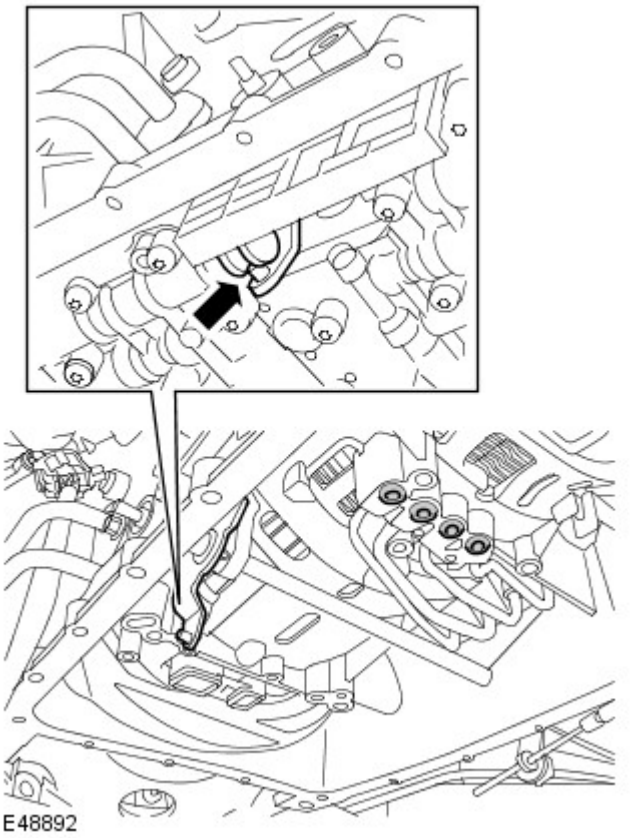

1. CAUTIONS:

⚠ Make sure that when fully fitted, all seals protrude by the same amount.

⚠ Engage the selector lever with the groove in the piston rod.

Install the valve block and oil pan.

- Clean the component mating faces.
- Install new seals.
- Install a new seal block.
- Tighten the Torx screws to 8 Nm (6 lb.ft).

2. Install a new electrical connector sleeve.

- Secure with retainer.

3. Connect the electrical connector.

4. Secure the oil pan.

- Tighten the Torx screws to 8 Nm (6 lb.ft).

5. Install the fuel filter support bracket.

6. Install the fuel filter.

7. Install the transmission support crossmember.

- Install the transmission support insulator through-bolt and tighten to 175 Nm (129 lb.ft).
- Install the 4 bolts.
- Tighten the nuts and bolts to 90 Nm (66 lb.ft).
- Remove the transmission jack.

8. Connect the battery ground cable.
For additional information, refer to: Specifications (414-00 Battery and Charging System - General Information, Specifications).

9. Fill the transmission with fluid.
For additional information, refer to: Transmission Fluid Drain and Refill (307-01A Automatic Transmission/Transaxle - TDV6 2.7L Diesel, General Procedures).

10. Using the Land Rover approved diagnostic equipment, calibrate the control valve body.

transmissionmanuals.com

Published: 11-May-2011

Automatic Transmission / Transaxle - TDV6 2.7L Diesel - Transmission Support Insulator

In-vehicle Repair

Removal

1. WARNING: Do not work on or under a vehicle supported only by a jack. Always support the vehicle on safety stands.

Raise and support the vehicle.

2. Remove the transmission crossmember.
For additional information, refer to: Transmission Support Crossmember - V8 5.0L Petrol (502-02 Full Frame and Body Mounting, Removal and Installation).

3. NOTE: 4.4L illustration shown, 4.0L and 2.7L Diesel are similar.

Remove the transmission support insulator.

- Remove the 4 bolts.

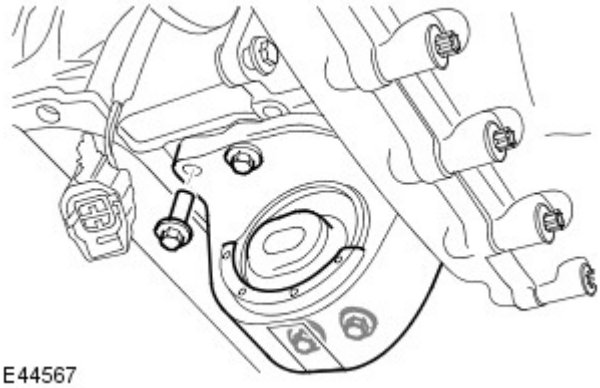

E44567

Installation

1. To install, reverse the removal procedure.

- Clean the component mating faces.
- Tighten the bolts to 60 Nm (44 lb.ft).

transmissionmanuals.com

Published: 11-May-2011

Automatic Transmission / Transaxle - TDV6 2.7L Diesel - Transmission

Removal and Installation

Special Tool(s)	
303-1069  E53727	Wrench adaptor 303-1069

Removal

1. Disconnect the battery ground cable.
   For additional information, refer to: Specifications (414-00 Battery and Charging System - General Information, Specifications).

2. WARNING: Do not work on or under a vehicle supported only by a jack. Always support the vehicle on safety stands.

   Raise and support the vehicle.

3. Remove the front driveshaft.
   For additional information, refer to: Front Driveshaft - TDV6 2.7L Diesel (205-01 Driveshaft, Removal and Installation).

4. Remove the exhaust system.
   For additional information, refer to: Exhaust System - Vehicles Without: Diesel Particulate Filter (DPF) (309-00A Exhaust System - TDV6 2.7L Diesel, Removal and Installation) / Exhaust System - Vehicles With: Diesel Particulate Filter (DPF) (309-00A Exhaust System - TDV6 2.7L Diesel, Removal and Installation).

5. Remove the rear driveshaft.
   For additional information, refer to: Rear Driveshaft (205-01 Driveshaft, Removal and Installation).

6. Remove the starter motor.
   For additional information, refer to: Starter Motor (303-06A Starting System - TDV6 2.7L Diesel, Removal and Installation).

7. Release the selector cable.

   - Using an additional wrench, restrain the clamping bush and loosen the locknut.
   - Compress the latch and release the cable.

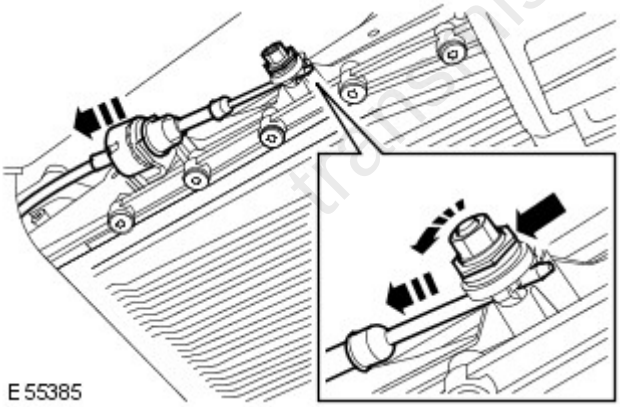
E55385

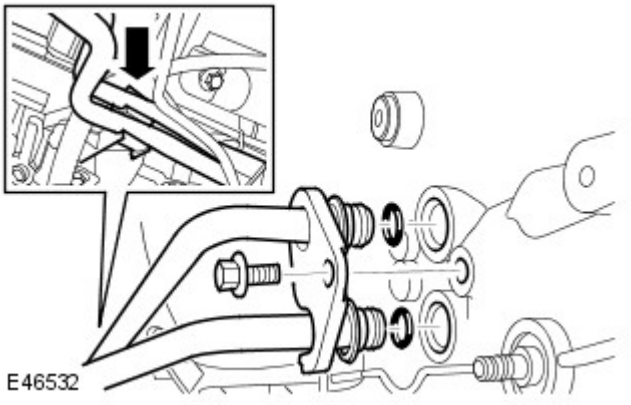

8. CAUTION: Always plug any open connections to prevent contamination.

Disconnect the transmission fluid lines.

- Remove the bolt.
- Release the clip.
- Remove and discard the 2 O-ring seals.

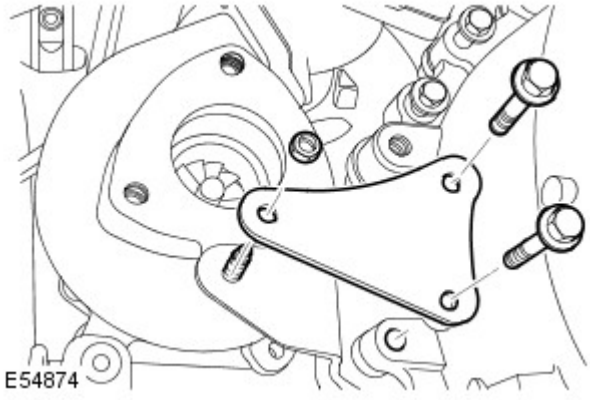

9. Remove the turbocharger support bracket.

- Remove the nut and 2 bolts.

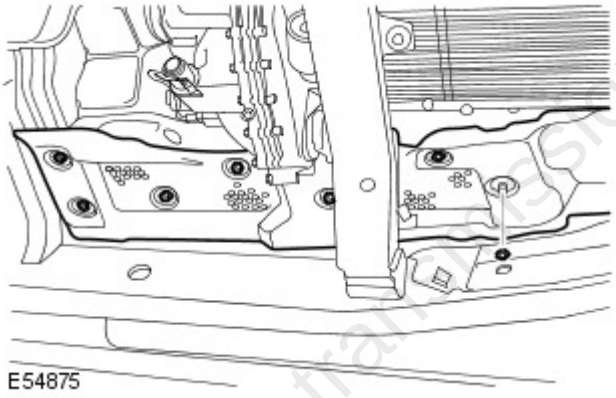

10. Remove the exhaust heat shield.

- Remove the 7 nuts.

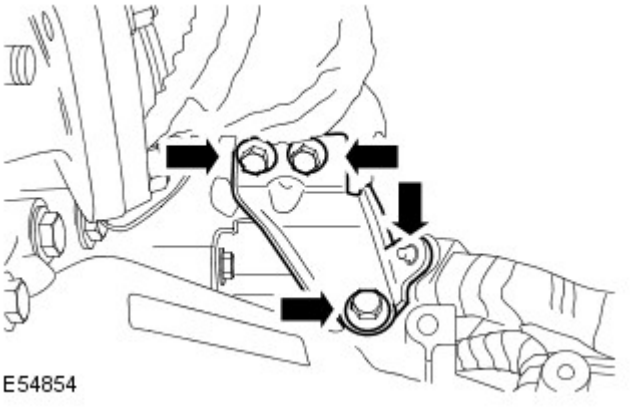

11. Remove the exhaust cross-over pipe LH support bracket.

- Remove the 3 bolts.
- Release the transmission wiring harness.

transmissionmanuals.com

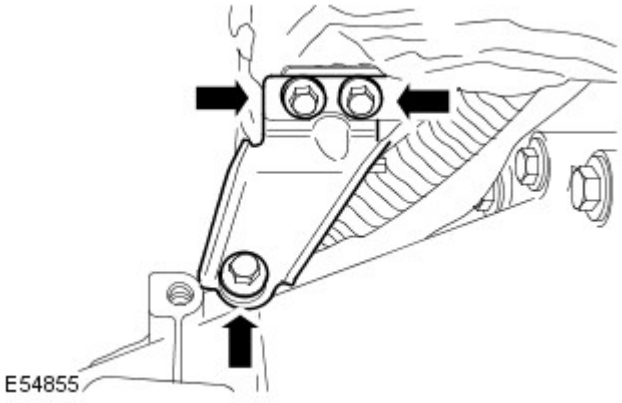

12. Remove the exhaust cross-over pipe RH support bracket.

- Remove the 3 bolts.

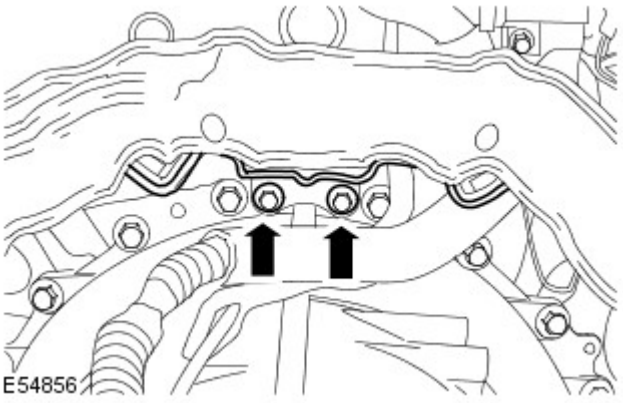

13. Remove the exhaust cross-over pipe center support bracket.

- Remove the 2 bolts.

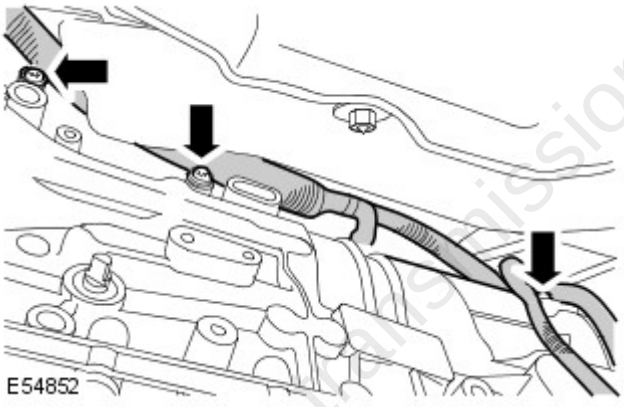

14. Release the wiring harness from the LH side of the transmission.

- Remove the 2 bolts.
- Release the clip.

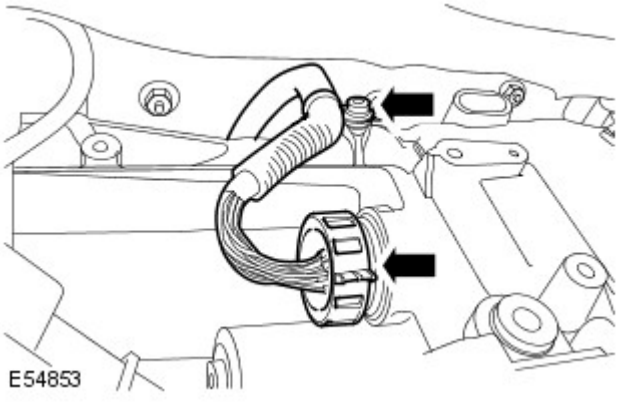

15. Release the wiring harness from the RH side of the transmission.

- Remove the bolt.
- Disconnect the electrical connector.

transmissionmanuals.com

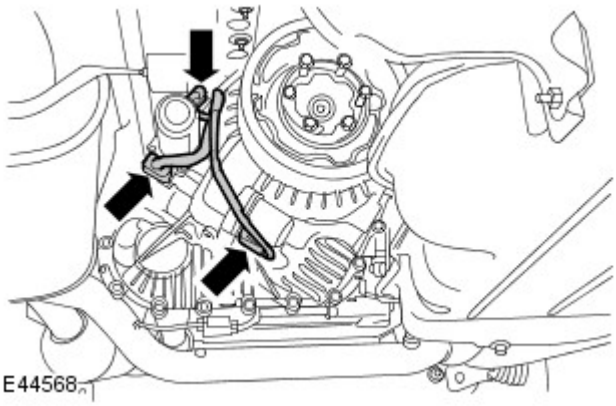

16. Disconnect the transfer case electrical connectors.

- Disconnect the 3 electrical connectors.

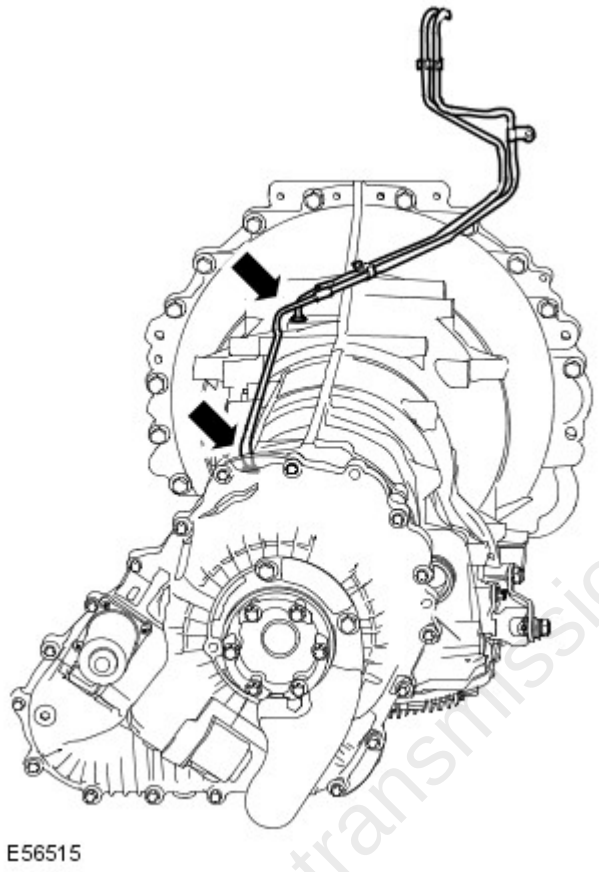

17. CAUTION: Always plug any open connections to prevent contamination.

• NOTE: Transmission shown removed for clarity.

Disconnect the breather line.

- Depress the locking ring.

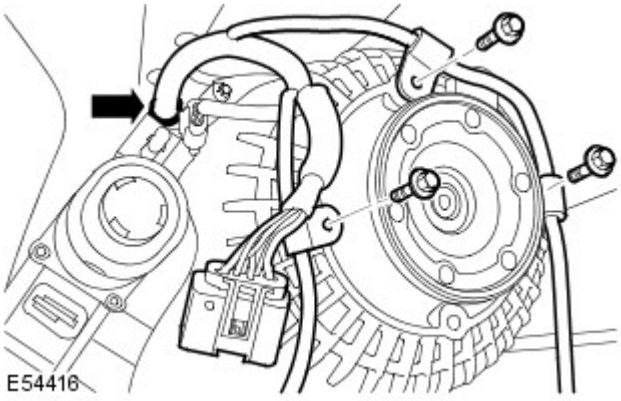

18. Release the wiring harness from the transfer case.

- Remove the 3 bolts.
- Release the clip.

transmissionmanuals.com

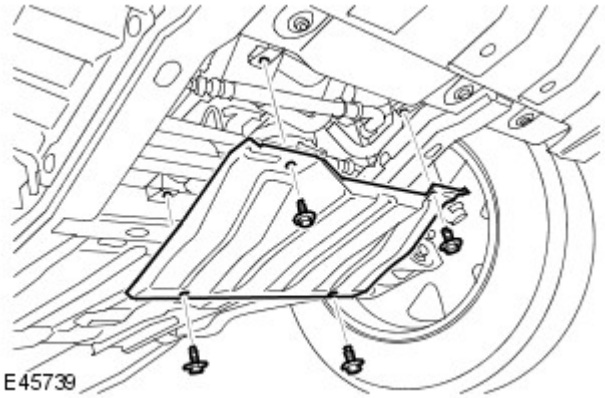
E45739

19. Remove the radiator access panel.

- Remove the 4 bolts.

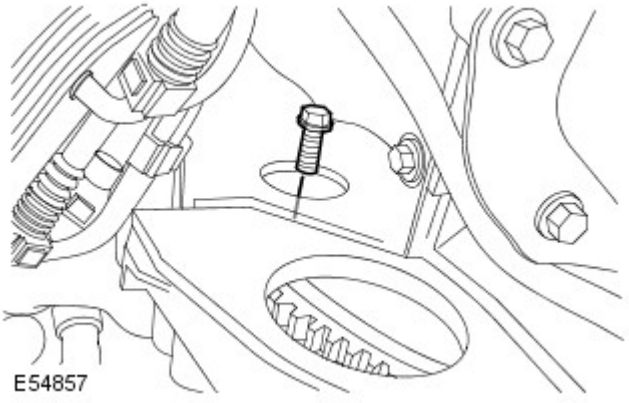
E54857

20. Release the flexplate.

- Remove the access plug.
- Rotate the crankshaft in a clockwise direction to access the retaining bolts.
- Remove the 4 bolts.

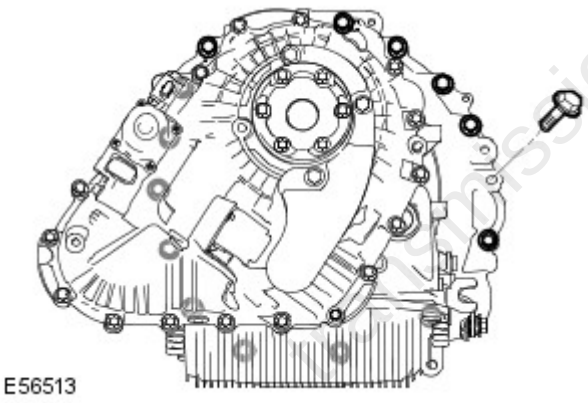
E56513

21. Using a transmission jack, support the transmission.

22. WARNINGS:

Secure the transmission to the transmission jack.

Support the engine. The engine will move forward when the transmission is removed.

CAUTION: Make sure the torque converter remains connected to the transmission.

• NOTE: Transmission shown removed for clarity.

With assistance, remove the transmission.

- Remove the 15 transmission bolts.

23. Using a suitable tool, retain the torque converter.

24. NOTE: Do not disassemble further if the component is removed for access only.

Remove the transmission from the transmission jack.

25. Drain the transmission fluid.

transmissionmanuals.com

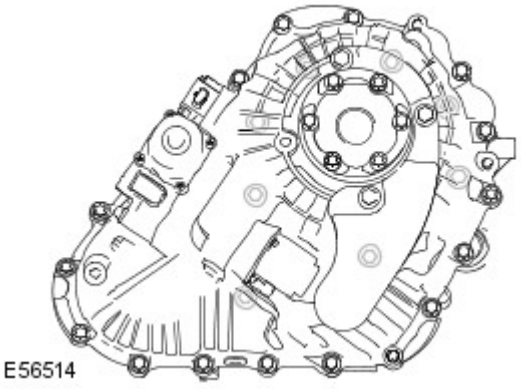

26. With assistance, remove the transfer case.

- Remove the 8 bolts.
- Remove and discard the O-ring seal.

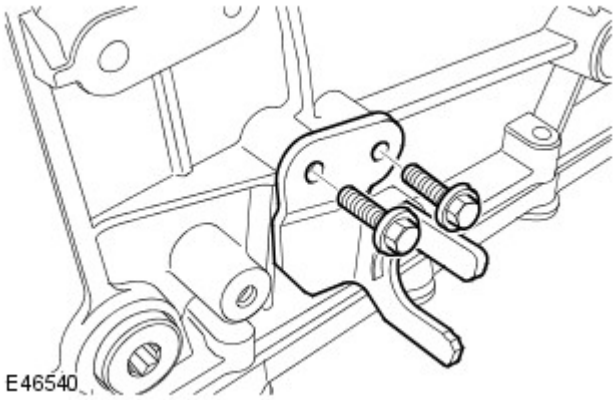

27. Remove the selector cable bracket.

- Remove the bolts.

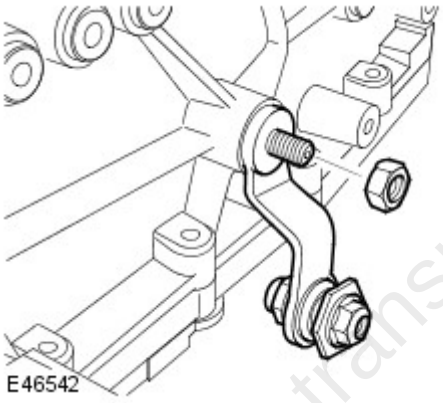

28. Remove the selector lever.

- Remove the nut.

29. Release the fuel filter housing and support bracket.

Installation

CAUTION: If the automatic transmission fluid is very dirty or it contains metallic particles, then along with a new transmission, install a new automatic transmission fluid cooler and lines.

transmissionmanuals.com

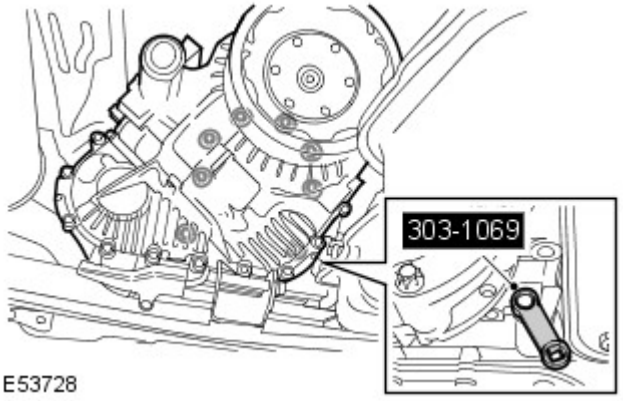

1. NOTE: Clean the component mating faces.

- NOTE: Install a new O-ring seal.

With assistance, install the transfer case.

- Lubricate input shaft splines with 'Weicon TL7391' grease.
- Install the 8 bolts.
- Using the special tool, tighten the bolts to 45 Nm (33 lb.ft).

2. Secure the selector lever.

- Tighten the nut to 12 Nm (9 lb.ft).

3. Attach the selector cable bracket.

- Install the 2 bolts and tighten to 10 Nm (7 lb.ft).

4. Secure the wiring harness to the transmission.

- Repeat the above procedure for the other side.
- Tighten the bolt to 10 Nm (7 lb.ft).

5. Using a suitable tool, retain the torque converter.

6. Position the transmission to the transmission jack.

7. Remove the torque converter retainer.

8. NOTE: Apply grease of the correct specification to the torque converter spigot.

- NOTE: Clean the component mating faces.

With assistance, install the transmission.

- Tighten the 15 bolts to 45 Nm (33 lb.ft).

9. Connect the breather line.

10. Secure the wiring harness to the transmission.

- Connect the electrical connector.
- Tighten the screws.
- Secure the wiring harness to the transmission.

11. NOTE: Clean the component mating faces.

- NOTE: Install the new O-ring seals.

Attach the transmission fluid lines.

- Secure the transmission fluid lines to the clip.
- Tighten the bolt to 10 Nm (7 lb.ft).

12. Attach the flexplate to the torque converter.

- Rotate the crankshaft to access the bolts.
- Install the access plug.
- Tighten the 4 bolts to 45 Nm (33 lb.ft).

13. Install the starter motor.
For additional information, refer to: Starter Motor (303-06A Starting System - TDV6 2.7L Diesel, Removal and Installation).

14. Install the radiator access panel.

- Install the 4 bolts and tighten to 10 Nm (7 lb.ft).

15. Install the exhaust manifold crossover pipe center support

transmissionmanuals.com

bracket.

- Loosely install the 2 bolts.

16. Install the exhaust manifold crossover pipe RH support bracket.

- Loosely install the 3 bolts.

17. Install the exhaust manifold crossover pipe LH support bracket.

- Loosely install the 3 bolts.

18. Tighten the exhaust manifold crossover pipe mounting bracket bolts in the following sequence.

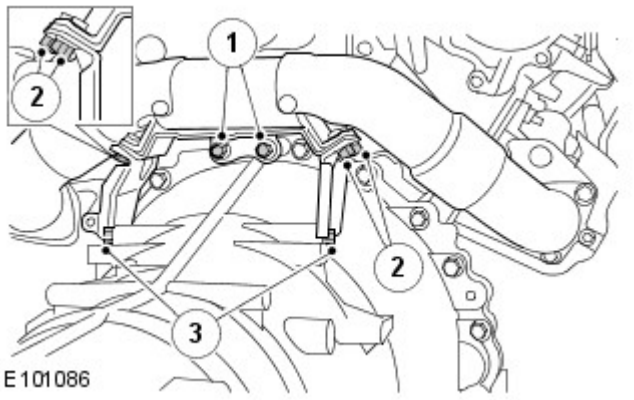

- Tighten the 2 bolts marked 1 to 10 Nm (7 lb.ft).
- Loosen the 2 bolts by 90 degrees.
- Tighten the 2 bolts marked 3 to 10 Nm (7lb.ft).
- Loosen the 2 bolts by 90 degrees.
- Tighten the 4 bolts maked 2 to 25 Nm (18 lb. ft).
- Tighten the 2 bolts maked 1 to 25 Nm (18 lb. ft).
- Tighten the 2 bolts maked 3 to 25 Nm (18 lb. ft).
- Attach the wiring harness.

19. Install the exhaust heat shield.

20. Install the turbocharger support bracket.

- Tighten the nut and 2 bolts to 22 Nm (16 lb.ft).

21. Install the rear driveshaft.
For additional information, refer to: Rear Driveshaft (205-01 Driveshaft, Removal and Installation).

22. Install the front driveshaft.
For additional information, refer to: Front Driveshaft - TDV6 2.7L Diesel (205-01 Driveshaft, Removal and Installation).

23. Install the exhaust system.
For additional information, refer to: Exhaust System - Vehicles Without: Diesel Particulate Filter (DPF) (309-00A Exhaust System - TDV6 2.7L Diesel, Removal and Installation) / Exhaust System - Vehicles With: Diesel Particulate Filter (DPF) (309-00A Exhaust System - TDV6 2.7L Diesel, Removal and Installation).

24. NOTE: Do not fully tighten the locking nut at this stage.

Connect the selector cable to the transmission.

- Engage the inner cable with the lever clamping bush.
- Install the selector cable to its abutment bracket.

25. Adjust the selector cable.
For additional information, refer to: Selector Lever Cable Adjustment (307-05B Automatic Transmission/Transaxle External Controls - V6 4.0L Petrol, General Procedures).

26. Connect the battery ground cable.
For additional information, refer to: Specifications (414-00 Battery and Charging System - General Information, Specifications).

27. Check and top-up the transfer case fluid level.

28. Check and top-up the transmission fluid level.
For additional information, refer to: Transmission Fluid Level Check (307-01B Automatic Transmission/Transaxle - V6 4.0L Petrol, General Procedures).

29. Lower the vehicle.

transmissionmanuals.com